# PNC
# BOMBAS DE ENGRANAJES
## *GEAR PUMPS*

Roquet
making **moves**

Roquet

## Introducción a la empresa
*Introduction to the company*

HISTORIA Más de medio siglo de trayectoria especializada en óleo-dinámica. Roquet es proveedor internacional en los sectores agrícola, naval, manutención, máquina-herramienta, automoción pesada, maquinaria de obras públicas, minería, eólica, alimentación, etc. Marca líder en España y una referencia importante en el ámbito internacional.

TECNOLOGÍA Roquet dispone de un importante departamento de diseño y desarrollo, con bancos de prueba de fatiga, nivel sonoro, resistencia a la corrosión, etc, apoyados por un avanzado laboratorio metalográfico. Se realizan grandes inversiones en centros de mecanizado de última generación para mantener una óptima calidad-productividad. La mayoría de piezas criticas (correderas, piezas de fundición, ejes de bomba, etc) se fabrican íntegramente en la propia empresa.

FIABILIDAD Una extensa gama de productos robustos y resistentes. Diseñados para rendir, construidos para durar. Todas las gamas de productos se someten a pruebas de vida en condiciones de trabajo realistas durante el diseño y desarrollo del producto. De esta forma se asegura su perfecta adaptación a las diversas aplicaciones finales tales como tractores, carretillas elevadoras, palas cargadoras, excavadoras, grúas, volquetes, muelles de carga... Se prueba el 100% de las unidades producidas, según procedimientos internos de prueba, antes de la expedición.

CAPACIDAD 400 profesionales en plantilla. Cuatro plantas de producción con una superficie cubierta de 30.000 m². Producción actual: 180.000 bombas, 300.000 cuerpos de distribuidor, 500.000 cilindros y 30.000 grupos motobombas compactos fabricados al año. Una red comercial de distribución extendida por más de 35 países de los 5 continentes.

*With over fifty years experience in fluid power transmission, Roquet is an international supplier of hydraulic components for construction machinery, agricultural machinery, truck-mounted and other hydraulic applications. Roquet is the leading brand in the Spanish market as well as an important worldwide reference in its sector.*

*One of the main reasons for the continued growth of Roquet is its development department. This department has over 30 fatigue test rigs; corrosion-resistance and noise test facilities and is supported by a modern metallurgical laboratory. The continuous investment in the latest machine tool technology ensures maintenance of optimal quality products and production efficiency. The vast majority of critical components such as valve spools, castings, pump shafts, … are fully manufactured in-house.*

*A broad range of robust products: designed to perform, built to last. All Roquet product ranges are durability tested under realistic conditions during their design and development phase. As a result of this, a perfect adaptation to the variety of final applications such as tractors, fork-lifts, trucks, loaders, excavators, cranes, dumpers, dock-levellers,… is achieved. Each and every Roquet manufactured unit is tested, according to internal test procedures, before being sent to the customer.*

*400 qualified employees. Four factories (Cylinder factory, pump factory, valve factory and foundry) with a total floor area of 30.000 m2. Current annual production quantities: 220.000 pumps, 200.000 control valve bodies, 500.000 cylinders (automated manufacturing, assembling and painting) and 30.000 power packs. The Roquet distribution network reaches over 35 countries around the world.*

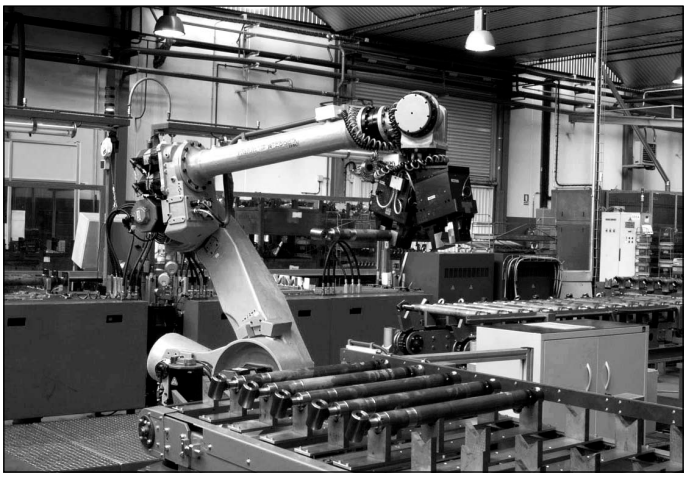

## NOMENCLATURAS REFERENCIAS — *CODING SYSTEM*

| 1 | PNC | 80 | D | A | 01 | M | –* |
|---|---|---|---|---|---|---|---|

### Tipo / *Type*

| | |
|---|---|
| 1 | Sin polea / *Without pulley* |
| 13 | Con cojinete de apoyo y retén. *With ball bearing and shaft SEAL* |
| 14 | Con dos retenes y fuga exterior. *With two shafts seals and external drain.* |

### Modelo / *Model*

| | | |
|---|---|---|
| PNC | Bomba de engranajes *Gear pump* | |
| PNJ | Bomba doble *Double pump* | PNC-PNC |
| PNK | Bomba doble *Double pump* | PNC-PNA |
| PNH | Bomba doble *Double pump* | PNC-L |
| PNZ | Bomba doble *Double pump* | PNC-LO |

### Caudal bomba a 1500 RPM a 0 bar
### *Pump flow rate at 1500 RPM and 0 bar*

Ver hoja técnica
*See technical data*

### Datos adicionales
### *Additional data*

### Formas conexión tomas
### *Port connection form*

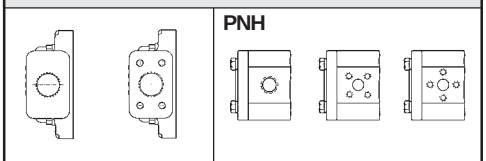


### Tipo tapas / *Fixing flange*

01 - 09 - 10 - 11 - 50

### Forma eje motriz
### *Driving shaft form*

A - E - F - G - H - J - S - X

### Sentido de giro / *Rotation direction*

| | |
|---|---|
| D | Derecha / *Clockwise* |
| I | Izquierda / *Counterclockwise* |

## Índice
## *Index*

**Bomba de engranajes / *Gear pump*** **PNC**

Datos técnicoshidráulicos / *Hydraulic technical data* ..... pag. 3
Tapa tipo 01 / *Front flange type 01* ..... pag. 4
Tapa tipo 10 / *Front flange type 10* ..... pag. 5
Tapa tipo 09 / *Front flange type 09* ..... pag. 6
Tapa tipo 50 / *Front flange type 50* ..... pag. 7

**Bomba de engranajes / *Gear pump*** **PNJ**

Tapa tipo 09 / *Front flange type 09* ..... pag. 8

**Bomba de engranajes / *Gear pump*** **PNK**

Tapa tipo 09 / *Front flange type 09* ..... pag. 9

**Bomba de engranajes / *Gear pump*** **PNH**

Tapa tipo 09 / *Front flange type 09* ..... pag. 10

**Sección / *Section***

PNK ..... pag. 11
PNJ ..... pag. 11



Polígono Indutrial O Rebullón s/n. 36416 - Mos - España - rodavigo@rodavigo.com

Roquet

# Bomba de engranajes
## *Gear Pump*

Serie / Type: **PNC**

| **Datos técnicos hidráulicos** *Hydraulic technical data* | | | | | | | | |
|---|---|---|---|---|---|---|---|---|
| Caudal bomba *Pump flow rate* | L/min. 1500 R.P.M *(US. GPM 1500 RPM)* | 80 (21) | 100 (26) | 125 (33) | 150 (39) | 175 (46) | 200 (53) | 225 (59) |
| Cilindrada *Displacement* | $cm^3$/v - cc/rev *($in^3$/rev)* | 53,3 (3,27) | 66,6 (4,06) | 83,3 (5,08) | 100 (6,10) | 116,6 (7,11) | 133,3 (8,13) | 150 (9,15) |
| Presión máx. continua en *Cont. max. pressure* | bar *(PSI)* | 260 (3700) | | 250 (3550) | | 225 (3200) | 200 (2850) | 175 (2500) |
| Presión máx. inter. 5 seg. max. *Intermittent max. pressure* | bar *(PSI)* | 290 (4100) | | 275 (3900) | | 250 (3550) | 225 (3200) | 200 (2850) |
| R.P.M. máximas *Max. R.P.M.* | | 3000 | | | | 2500 | 2000 | 1750 |
| Mínimas R.P.M. según presión *Min. R.P.M. at given pressures* | 100 bar (1425 PSI) | 400 | | | | 350 | | |
| | 175 bar (2500 PSI) | 450 | | | | 400 | | |
| | 250 bar (3550 PSI) | 550 | | | | - | - | - |
| Aceite recomendado *Fluid to be used* | | ISO 6743 tipo HM, HV ó HG | | | | | | |
| Viscosidad *Viscosity range* | | ISO 3448 cat. VG32-VG46 | | | | | | |
| Grado de limpieza del aceite *Recommended fluid cleanliness* | | 19/16 s/. ISO 4406 ó RP70H | | | | | | |
| Temperatura de trabajo del aceite *Oil temperature* | | 5°C... 60°C<br>40°F...140°F | | | | | | |
| Temperatura ambiente *Ambient temperature* | | -20°C... +80°C<br>-70°F... +175°F | | | | | | |

Diagrama de caudales y potencias
*Flow rate and power diagram*

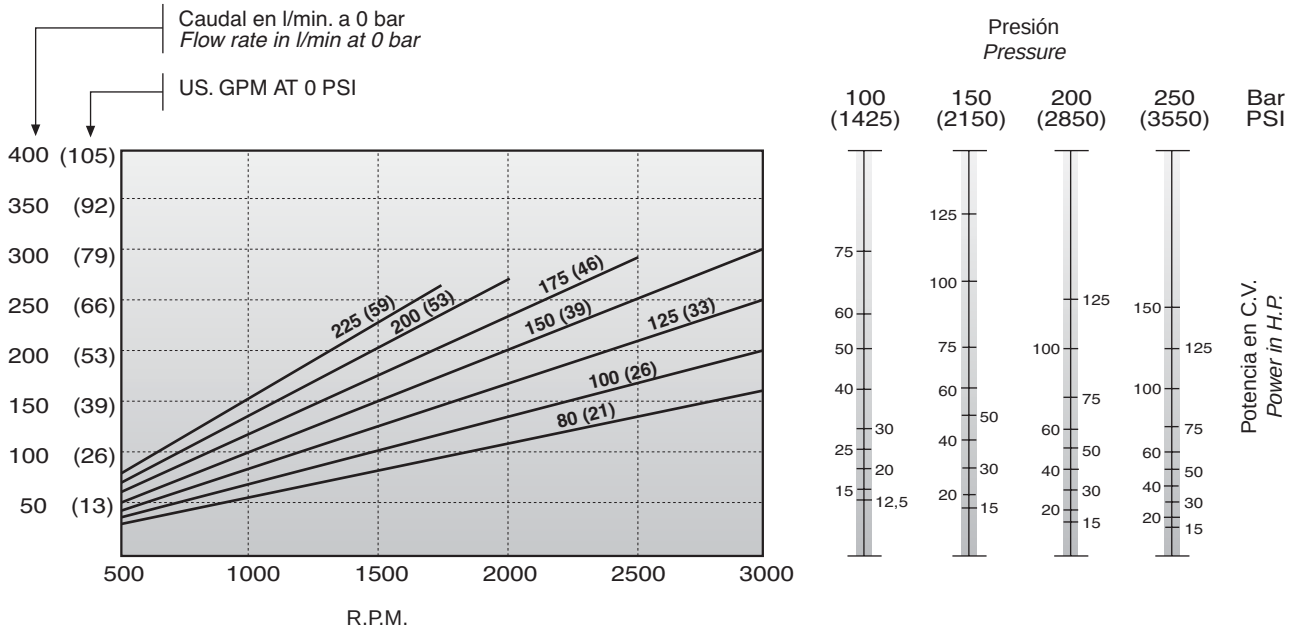


NOTA: Estos diagramas han sido obtenidos con un aceite de viscosidad VG 46 y una temperatura de 50°C.
*NOTE: These results have been obtained with VG 46 viscosity oil and at 50 deg. C (122°F).*



Polígono Indutrial O Rebullón s/n. 36416 - Mos - España - rodavigo@rodavigo.com

## Tapa tipo *Front flange type* 01

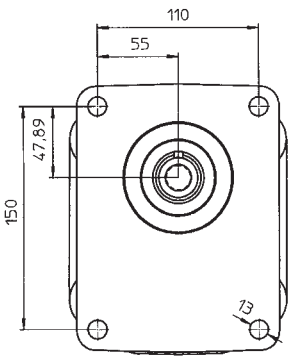


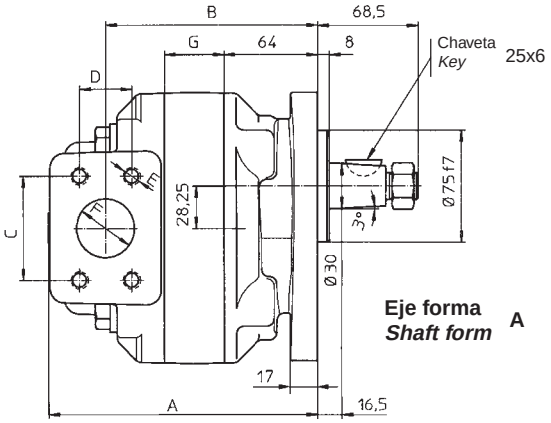


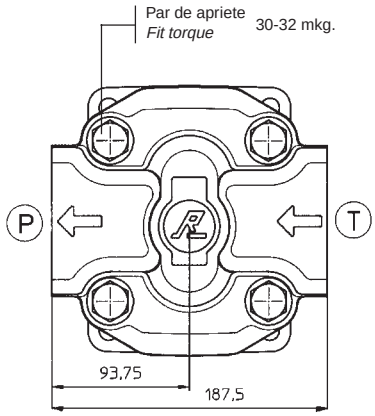


| Sentido de giro *Rotation sense* | Aspiración *Suction* | Presión *Pressure* |
|---|---|---|
| *D Derecha *Clockwise* | T | P |
| *I Izquierda *Counter Clockwise* | P | T |

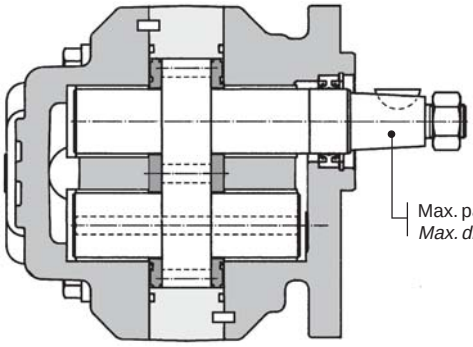

| Referencia *Reference* | Cilindrada cm³/v *Displacement cc/r.* | G | A | B | Presión *Pressure* | | | | Aspiración *Suction* | | | | Peso *Weight* Kg. |
|---|---|---|---|---|---|---|---|---|---|---|---|---|---|
| | | | | | C | D | E | F | C | D | E | F | |
| 1 PNC80*A01M | 53,3 | 41 | 184 | 145 | 58,7 | 30,2 | M.10 | 32 | 69,8 | 35,7 | M.12 | 38 | 23 |
| 1 PNC100*A01M | 66,6 | 47,5 | 190,5 | 151,5 | | | | | | | | | 24 |
| 1 PNC125*A01M | 83,3 | 55,5 | 198,5 | 159,5 | | | | | | | | | 25 |
| 1 PNC150*A01M | 100 | 64 | 207 | 168 | 69,8 | 35,7 | M.12 | 38 | 77,8 | 42,9 | M.12 | 50 | 26 |
| 1 PNC175*A01M | 116,6 | 72 | 215 | 176 | | | | | | | | | 27 |
| 1 PNC200*A01M | 133,3 | 80,5 | 223,5 | 184,5 | | | | | | | | | 28 |
| 1 PNC225*A01M | 150 | 88,5 | 231,5 | 192,5 | | | | | | | | | 29 |



Polígono Indutrial O Rebullón s/n. 36416 - Mos - España - rodavigo@rodavigo.com

## Tapa tipo / *Front flange type* 10

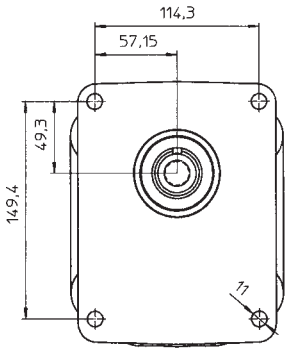


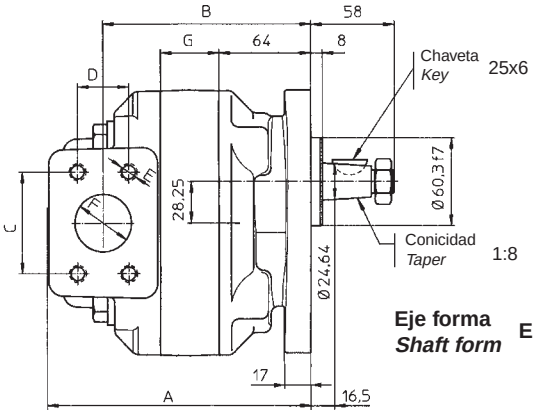


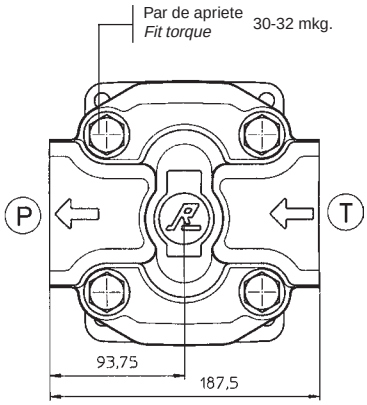


| Sentido de giro *Rotation sense* | Aspiración *Suction* | Presión *Pressure* |
|---|---|---|
| *D Derecha *Clockwise* | T | P |
| *I Izquierda *Counter Clockwise* | P | T |

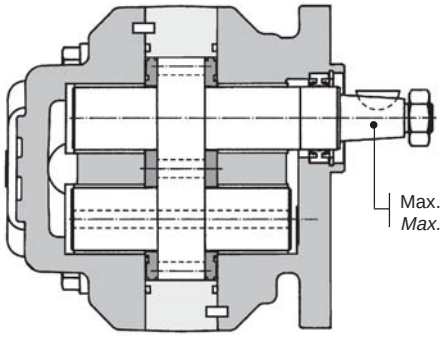

| Referencia *Reference* | Cilindrada cm³/v *Displacement cc/r.* | G | A | B | Presión *Pressure* | | | | Aspiración *Suction* | | | | Peso *Weight* Kg. |
|---|---|---|---|---|---|---|---|---|---|---|---|---|---|
| | | | | | C | D | E | F | C | D | E | F | |
| 1 PNC80*E10M | 53,3 | 41 | 184 | 145 | 58,7 | 30,2 | M.10 | 32 | 69,8 | 35,7 | M.12 | 38 | 23 |
| 1 PNC100*E10M | 66,6 | 47,5 | 190,5 | 151,5 | | | | | | | | | 24 |
| 1 PNC125*E10M | 83,3 | 55,5 | 198,5 | 159,5 | | | | | | | | | 25 |
| 1 PNC150*E10M | 100 | 64 | 207 | 168 | 69,8 | 35,7 | M.12 | 38 | 77,8 | 42,9 | M.12 | 50 | 26 |
| 1 PNC175*E10M | 116,6 | 72 | 215 | 170 | | | | | | | | | 27 |
| 1 PNC200*E10M | 133,3 | 80,5 | 223,5 | 184,5 | | | | | | | | | 28 |
| 1 PNC225*E10M | 150 | 88,5 | 231,5 | 192,5 | | | | | | | | | 29 |

## Tapa tipo / *Front flange type* 09

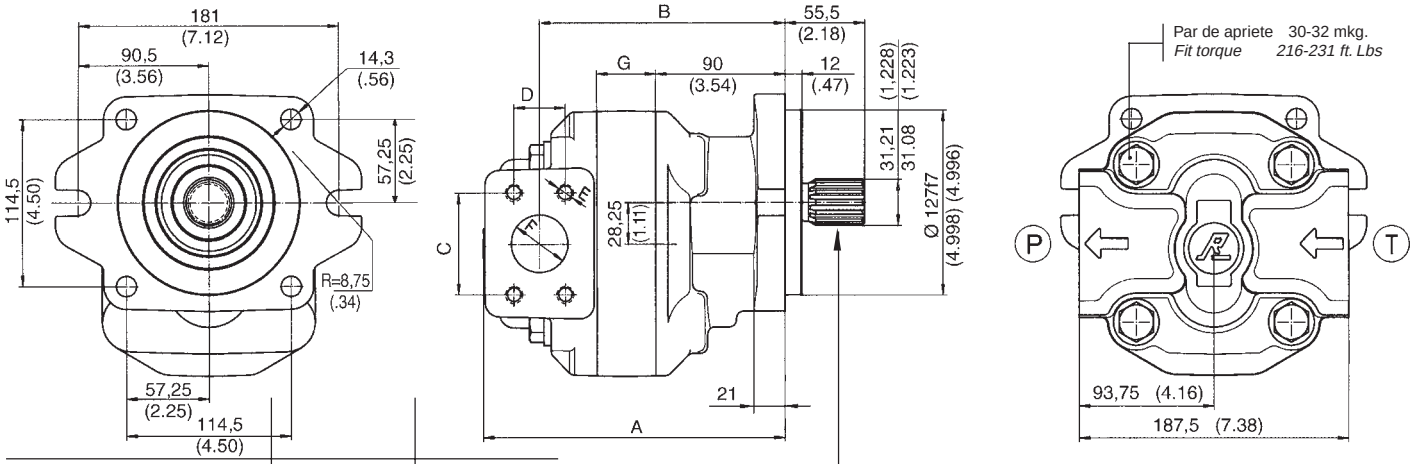


| Sentido de giro *Rotation sense* | Aspiración *Suction* | Presión *Pressure* |
|---|---|---|
| ⁎D Derecha *Clockwise* | T | P |
| ⁎I Izquierda *Counter Clockwise* | P | T |

**Eje forma / Shaft form G**

Características / *Spline data*
ANSI B92.1
Diametral pitch 12/24
Angulo de presión / *Pressure angle* 30°
Nº de dientes / *Teeth number* 14

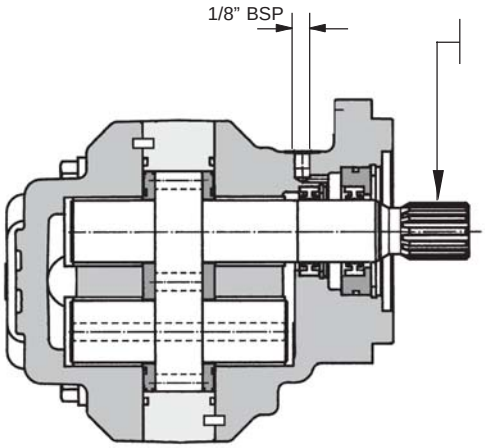


Max. par de arrastre 800 Nm.
*Max. driving torque 577 ft. Lbs.*

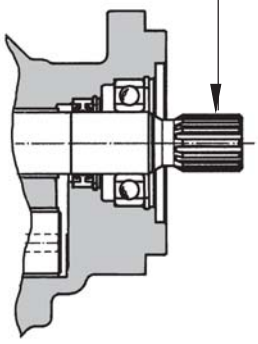

▲ 14 PNC... Con dos retenes y fuga exterior.
*With two shafts seals and external drain.*

▲ 13 PNC... Con cojinete de apoyo y retén.
*With ball bearing and shaft seal.*

| Referencia *Reference* | Cilindrada *Displacement* | | G mm *(in.)* | A mm *(in.)* | B mm *(in.)* | Presión *Pressure* | | | | Aspiración *Suction* | | | | Peso *Weight* | |
|---|---|---|---|---|---|---|---|---|---|---|---|---|---|---|---|
| | cm³/v *cc/r.* | in³/rev. | | | | C | D | E | F | C | D | E | F | Kg. | Lb. |
| ▲ PNC80⁎G09M | 53,3 | 3,27 | 41 (1,61) | 210 (8,26) | 171 (6,73) | 58,7 (2,31) | 30,2 (1,18) | M.10 | 32 (1,25) | 69,8 (2,75) | 35,7 (1,40) | M.12 | 38 (1,49) | 25,5 | 56,1 |
| ▲ PNC100⁎G09M | 66,6 | 4,06 | 47,5 (1,87) | 216,5 (8,52) | 177,5 (6,98) | | | | | | | | | 26,5 | 58,3 |
| ▲ PNC125⁎G09M | 83,3 | 5,08 | 55,5 (2,18) | 224,5 (8,83) | 185,5 (7,30) | | | | | | | | | 27,5 | 60,5 |
| ▲ PNC150⁎G09M | 100 | 6,10 | 64 (2,51) | 233 (9,17) | 194 (7,63) | 69,8 (2,75) | 35,7 (1,40) | M.12 | 38 (1,49) | 77,8 (3,06) | 42,9 (1,68) | M.12 | 50 (1,96) | 28,5 | 62,7 |
| ▲ PNC175⁎G09M | 116,6 | 7,11 | 72 (2,83) | 241 (9,48) | 202 (7,95) | | | | | | | | | 29,5 | 64,9 |
| ▲ PNC200⁎G09M | 133,3 | 8,13 | 80,5 (3,16) | 249,5 (9,82) | 210,5 (8,28) | | | | | | | | | 30,5 | 67,1 |
| ▲ PNC225⁎G09M | 150 | 9,15 | 88,5 (3,48) | 257,5 (10,13) | 218,5 (8,60) | | | | | | | | | 31,5 | 69,3 |



Polígono Indutrial O Rebullón s/n. 36416 - Mos - España - rodavigo@rodavigo.com

## Tapa tipo / *Front flange type* 50

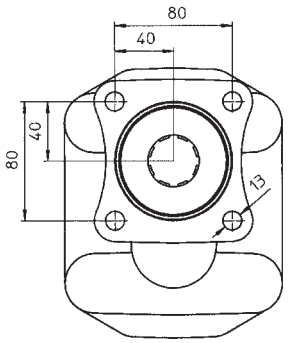


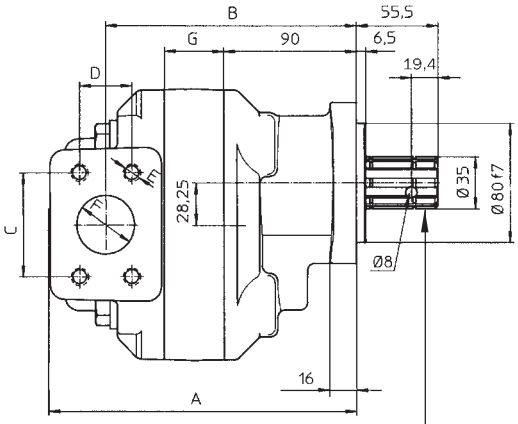


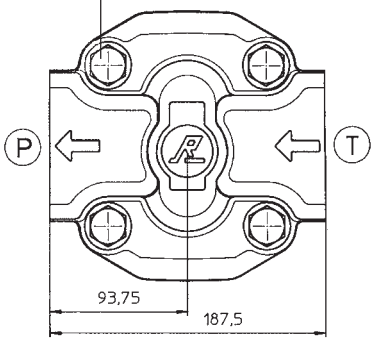


| Sentido de giro *Rotation sense* | Aspiración *Suction* | Presión *Pressure* |
|---|---|---|
| *D Derecha *Clockwise* | T | P |
| *I Izquierda *Counter Clockwise* | P | T |

**Eje forma / Shaft form X**

Características / *Spline data*
DIN-5462
B - 8 x 32 x 36
Ancho del diente / *Tootd width* 6 H8
Nº de dientes / *Teeth number* 8

Max. par de arrastre / *Max. driving torque* 900 Nm.

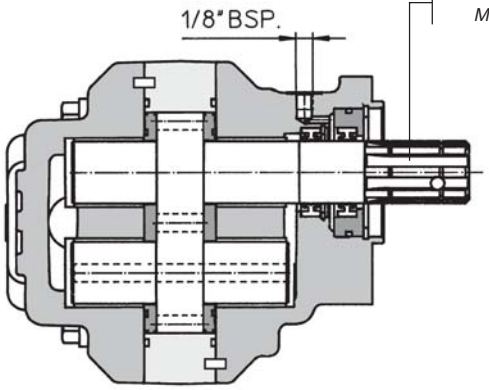


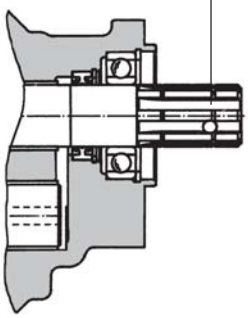

▲ 14 PNC... Con dos retenes y fuga exterior.
*With two shafts seals and external drain.*

▲ 13 PNC... Con cojinete de apoyo y retén.
*With ball bearing and shaft seal.*

| Referencia *Reference* | Cilindrada cm³/v *Displacement cc/r.* | G | A | B | Presión *Pressure* | | | | Aspiración *Suction* | | | | Peso *Weight* Kg. |
|---|---|---|---|---|---|---|---|---|---|---|---|---|---|
| | | | | | C | D | E | F | C | D | E | F | |
| ▲ PNC80*X50M | 53,3 | 41 | 210 | 171 | 58,7 | 30,2 | M.10 | 32 | 69,8 | 35,7 | M.12 | 38 | 24,5 |
| ▲ PNC100*X50M | 66,6 | 47,5 | 216,5 | 177,5 | | | | | | | | | 25,5 |
| ▲ PNC125*X50M | 83,3 | 55,5 | 224,5 | 185,5 | | | | | | | | | 26,5 |
| ▲ PNC150*X50M | 100 | 64 | 233 | 194 | 69,8 | 35,7 | M.12 | 38 | 77,8 | 42,9 | M.12 | 50 | 27,5 |
| ▲ PNC175*X50M | 116,6 | 72 | 241 | 202 | | | | | | | | | 28,5 |
| ▲ PNC200*X50M | 133,3 | 80,5 | 249,5 | 210,5 | | | | | | | | | 29,5 |
| ▲ PNC225*X50M | 150 | 88,5 | 257,5 | 218,5 | | | | | | | | | 30,5 |



Polígono Indutrial O Rebullón s/n. 36416 - Mos - España - rodavigo@rodavigo.com

Roquet

# Bomba doble de engranajes
## *Double Gear Pump*
**Tapa tipo / Front Flange type 09**

| Serie Type |
|---|
| **PNJ** |

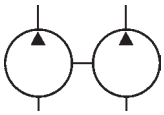

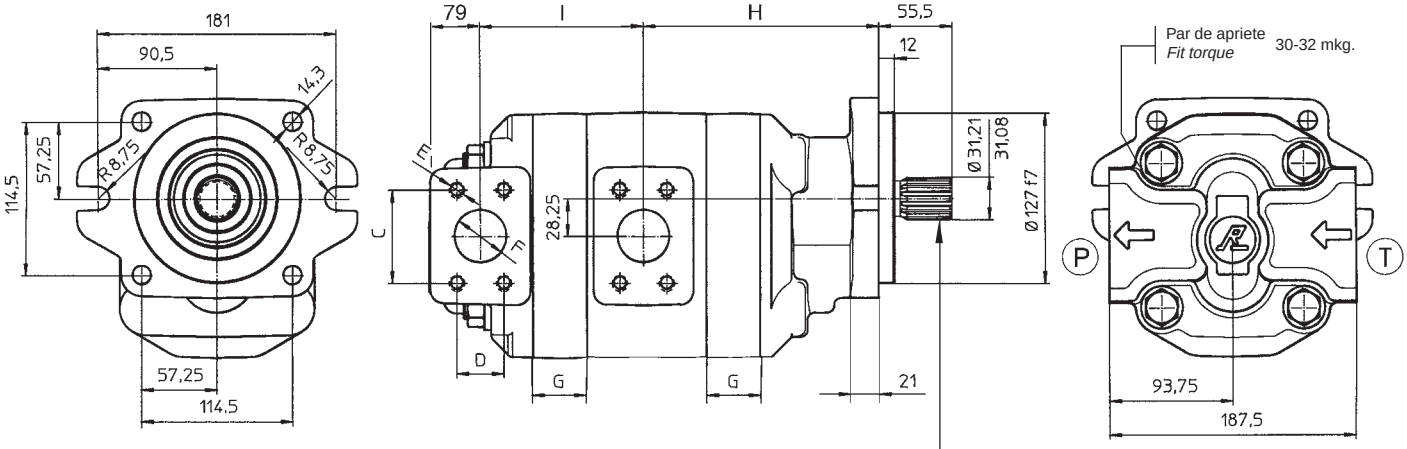


| Sentido de giro *Rotation sense* | Aspiración *Suction* | Presión *Pressure* |
|---|---|---|
| *D Derecha *Clockwise* | T | P |
| *I Izquierda *Counter Clockwise* | P | T |

**Eje forma / Shaft form G**

Características / *Spline data*
ANSI B92.1
Diametral pitch 12/24
Angulo de presión / *Pressure angle* 30°
Nº de dientes / *Teeth number* 14

Max. par de arrastre
*Max. driving torque* 350 Nm.

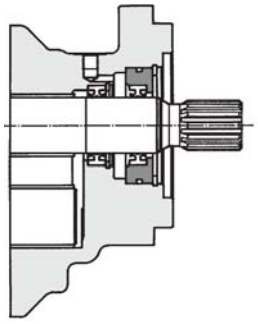

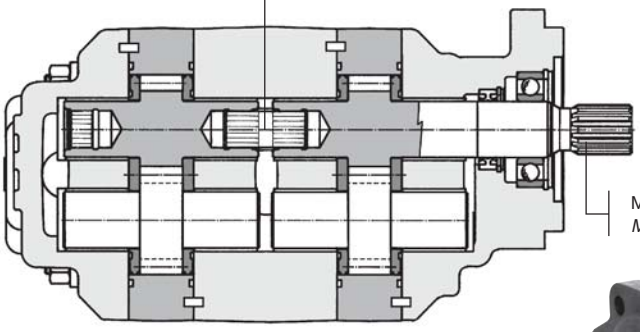

Max. par de arrastre
*Max. driving torque* 800 Nm.

▲
14 PNJ...
Con dos retenes y fuga exterior.
*With two shafts seals and external drain.*

▲
13 PNJ...
Con cojinete de apoyo y retén.
*With ball bearing and shaft seal.*

- Sustituir por el caudal deseado a 1500 rpm
  *Replace with flow at 1500 rpm*

| Referencia *Reference* | G | H | I | Presión *Pressure* | | | | Aspiración *Suction* | | | |
|---|---|---|---|---|---|---|---|---|---|---|---|
| | | | | C | D | E | F | C | D | E | F |
| ▲ PNJ80-●*G09M | 41 | 179 | 124 | 58,7 | 30,2 | M.10 | 32 | 69,8 | 35,7 | M.12 | 38 |
| ▲ PNJ100-●*G09M | 47,5 | 185,5 | 130,5 | | | | | | | | |
| ▲ PNJ125-●*G09M | 55,5 | 193,5 | 138,5 | | | | | | | | |
| ▲ PNJ150-●*G09M | 64 | 202 | 147 | 69,8 | 35,7 | M.12 | 38 | 77,8 | 42,9 | M.12 | 50 |
| ▲ PNJ175-●*G09M | 72 | 290 | 155 | | | | | | | | |
| ▲ PNJ200-●*G09M | 80,5 | 218,5 | 163,5 | | | | | | | | |
| ▲ PNJ225-●*G09M | 88,5 | 226,5 | 171,5 | | | | | | | | |



Polígono Indutrial O Rebullón s/n. 36416 - Mos - España - rodavigo@rodavigo.com

Roquet

# Bomba doble de engranajes
## *Double Gear Pump*
### Tapa tipo / Front Flange type 09

**Serie / Type**
**PNK**

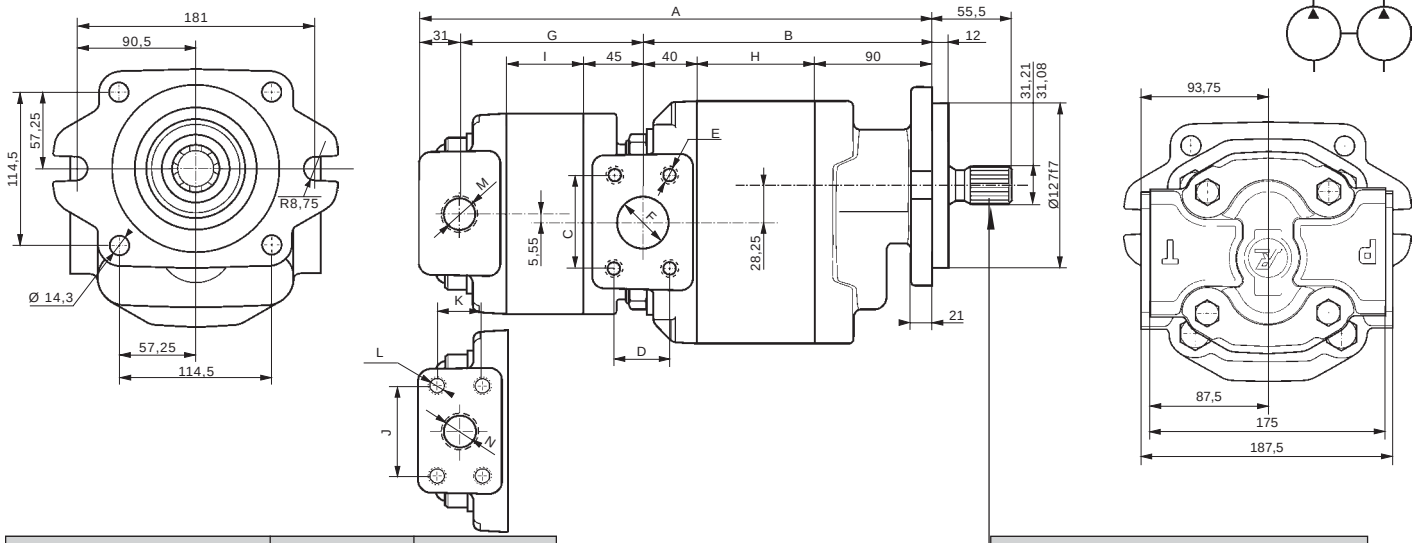


| Sentido de giro *Rotation sense* | Aspiración *Suction* | Presión *Pressure* |
|---|---|---|
| *D Derecha *Clockwise* | T | P |
| *I Izquierda *Counter Clockwise* | P | T |

**Eje forma / Shaft form G**

Características / *Spline data*
ANSI B92.1
Diametral pitch 12/24
Angulo de presión / *Pressure angle* 30°
Nº de dientes / *Teeth number* 14

| Referencia *Reference* | Cilindrada *Displacement* cm³/v PNC | PNA | A | B | G | H | I | Presión / *Pressure* Conexión / *Connection* M (S.A.E.) C | D | E | F | J | K | L | N | R M | Aspiración / *Suction* Conexión / *Connection* M (S.A.E.) C | D | E | F | J | K | L | N | R M |
|---|---|---|---|---|---|---|---|---|---|---|---|---|---|---|---|---|---|---|---|---|---|---|---|---|---|
| ▲ PNK 80 - 36 *G09MR | 53.3 | 24 | 314 | 171 | 111.5 | 41 | 31.5 | 58.7 | 30.2 | M.10 | Ø32 | 52.4 | 26.2 | M.10 | 26 | 3/4" BSP | 69.8 | 35.7 | M.12 | Ø38 | 58.7 | 30.2 | M.10 | 32 | 1" BSP |
| 45 *G09MR | | 30 | 319 | | 116.5 | | 36.5 | | | | | | | | | | | | | | | | | | |
| 54 *G09MR | | 36 | 324 | | 121.5 | | 41.5 | | | | | | | | | | | | | | | | | | |
| 66 *G09MR | | 44 | 330 | | 128 | | 48 | | | | | | | | | | | | | | | | | | |
| ▲PNK 100 - 36 *G09MR | 66.6 | 24 | 320 | 177.5 | 111.5 | 47.5 | 31.5 | 58.7 | 30.2 | M.10 | Ø32 | 52.4 | 26.2 | M.10 | 26 | 3/4" BSP | 69.8 | 35.7 | M.12 | Ø38 | 58.7 | 30.2 | M.10 | 32 | 1 BSP |
| 45 *G09MR | | 30 | 325 | | 116.5 | | 36.5 | | | | | | | | | | | | | | | | | | |
| 54 *G09MR | | 36 | 330 | | 121.5 | | 41.5 | | | | | | | | | | | | | | | | | | |
| 66 *G09MR | | 44 | 337 | | 128 | | 48 | | | | | | | | | | | | | | | | | | |
| 84 *G09MR | | 56 | 346 | | 137.5 | | 57.5 | | | | | 58.7 | 30.2 | | 32 | 1" BSP | | | | | 69.9 | 35.7 | M.12 | 38 | 1"1/4 BSP |
| 96 *G09MR | | 64 | 353 | | 144.5 | | 64.5 | | | | | | | | | | | | | | | | | | |
| ▲PNK 125 - 36 *G09MR | 83.3 | 24 | 328 | 185.5 | 111.5 | 55.5 | 31.5 | 58.7 | 30.2 | M.10 | Ø32 | 52.4 | 26.2 | M.10 | 26 | 3/4" BSP | 69.8 | 35.7 | M.12 | Ø38 | 58.7 | 30.2 | M.10 | 32 | 1" BSP |
| 45 *G09MR | | 30 | 333 | | 116.5 | | 36.5 | | | | | | | | | | | | | | | | | | |
| 54 *G09MR | | 36 | 338 | | 121.5 | | 41.5 | | | | | | | | | | | | | | | | | | |
| 66 *G09MR | | 44 | 345 | | 128 | | 48 | | | | | | | | | | | | | | | | | | |
| 84 *G09MR | | 56 | 354 | | 137.5 | | 57.5 | | | | | 58.7 | 30.2 | | 32 | 1" BSP | | | | | 69.9 | 35.7 | M.12 | 38 | 1"1/4 BSP |
| 96 *G09MR | | 64 | 361 | | 144.5 | | 64.5 | | | | | | | | | | | | | | | | | | |
| 110 *G09MR | | 73,3 | 369 | | 152 | | 72 | | | | | | | | | | | | | | | | | | |
| ▲PNK 150 - 36 *G09MR | 100 | 24 | 337 | 194 | 111.5 | 64 | 31.5 | 69.8 | 35.7 | M.12 | Ø38 | 52.4 | 26.2 | M.10 | 26 | 3/4" BSP | 77.8 | 42.9 | M.12 | Ø50 | 58.7 | 30.2 | M.10 | 32 | 1" BSP |
| 45 *G09MR | | 30 | 342 | | 116.5 | | 36.5 | | | | | | | | | | | | | | | | | | |
| 54 *G09MR | | 36 | 347 | | 121.5 | | 41.5 | | | | | | | | | | | | | | | | | | |
| 66 *G09MR | | 44 | 353 | | 128 | | 48 | | | | | | | | | | | | | | | | | | |
| 84 *G09MR | | 56 | 363 | | 137.5 | | 57.5 | | | | | 58.7 | 30.2 | | 32 | 1" BSP | | | | | 69.9 | 35.7 | M.12 | 38 | 1"1/4 BSP |
| 96 *G09MR | | 64 | 370 | | 144.5 | | 64.5 | | | | | | | | | | | | | | | | | | |
| 110 *G09MR | | 73,3 | 377 | | 152 | | 72 | | | | | | | | | | | | | | | | | | |
| ▲PNK 175 - 36 *G09MR | 116,6 | 24 | 345 | 202 | 111.5 | 72 | 31.5 | 69.8 | 35.7 | M.12 | Ø38 | 52.4 | 26.2 | M.10 | 26 | 3/4" BSP | 77.8 | 42.9 | M.12 | Ø50 | 58.7 | 30.2 | M.10 | 32 | 1" BSP |
| 45 *G09MR | | 30 | 350 | | 116.5 | | 36.5 | | | | | | | | | | | | | | | | | | |
| 54 *G09MR | | 36 | 355 | | 121.5 | | 41.5 | | | | | | | | | | | | | | | | | | |
| 66 *G09MR | | 44 | 361 | | 128 | | 48 | | | | | | | | | | | | | | | | | | |
| 84 *G09MR | | 56 | 371 | | 137.5 | | 57.5 | | | | | 58.7 | 30.2 | | 32 | 1" BSP | | | | | 69.9 | 35.7 | M.12 | 38 | 1"1/4 BSP |
| 96 *G09MR | | 64 | 378 | | 144.5 | | 64.5 | | | | | | | | | | | | | | | | | | |
| 110 *G09MR | | 73,3 | 385 | | 152 | | 72 | | | | | | | | | | | | | | | | | | |
| ▲PNK 200 - 36 *G09MR | 133,3 | 24 | 353 | 210.5 | 111.5 | 80.5 | 31.5 | 69.8 | 35.7 | M.12 | Ø38 | 52.4 | 26.2 | M.10 | 26 | 3/4" BSP | 77.8 | 42.9 | M.12 | Ø50 | 58.7 | 30.2 | M.10 | 32 | 1" BSP |
| 45 *G09MR | | 30 | 358 | | 116.5 | | 36.5 | | | | | | | | | | | | | | | | | | |
| 54 *G09MR | | 36 | 363 | | 121.5 | | 41.5 | | | | | | | | | | | | | | | | | | |
| 66 *G09MR | | 44 | 370 | | 128 | | 48 | | | | | | | | | | | | | | | | | | |
| 84 *G09MR | | 56 | 379 | | 137.5 | | 57.5 | | | | | 58.7 | 30.2 | | 32 | 1" BSP | | | | | 69.9 | 35.7 | M.12 | 38 | 1"1/4 BSP |
| 96 *G09MR | | 64 | 386 | | 144.5 | | 64.5 | | | | | | | | | | | | | | | | | | |
| 110 *G09MR | | 73,3 | 394 | | 152 | | 72 | | | | | | | | | | | | | | | | | | |
| ▲PNK 225 - 36 *G09MR | 150 | 24 | 361 | 218.5 | 111.5 | 88.5 | 31.5 | 69.8 | 35.7 | M.12 | Ø38 | 52.4 | 26.2 | M.10 | 26 | 3/4" BSP | 77.8 | 42.9 | M.12 | Ø50 | 58.7 | 30.2 | M.10 | 32 | 1" BSP |
| 45 *G09MR | | 30 | 366 | | 116.5 | | 36.5 | | | | | | | | | | | | | | | | | | |
| 54 *G09MR | | 36 | 371 | | 121.5 | | 41.5 | | | | | | | | | | | | | | | | | | |
| 66 *G09MR | | 44 | 378 | | 128 | | 48 | | | | | | | | | | | | | | | | | | |
| 84 *G09MR | | 56 | 387 | | 137.5 | | 57.5 | | | | | 58.7 | 30.2 | | 32 | 1" BSP | | | | | 69.9 | 35.7 | M.12 | 38 | 1"1/4 BSP |
| 96 *G09MR | | 64 | 394 | | 144.5 | | 64.5 | | | | | | | | | | | | | | | | | | |
| 110 *G09MR | | 73,3 | 402 | | 152 | | 72 | | | | | | | | | | | | | | | | | | |

Roquet

# Bomba doble de engranajes
## *Double Gear Pump*
### Tapa tipo / Front Flange type 09

**Serie / Type**
**PNH**

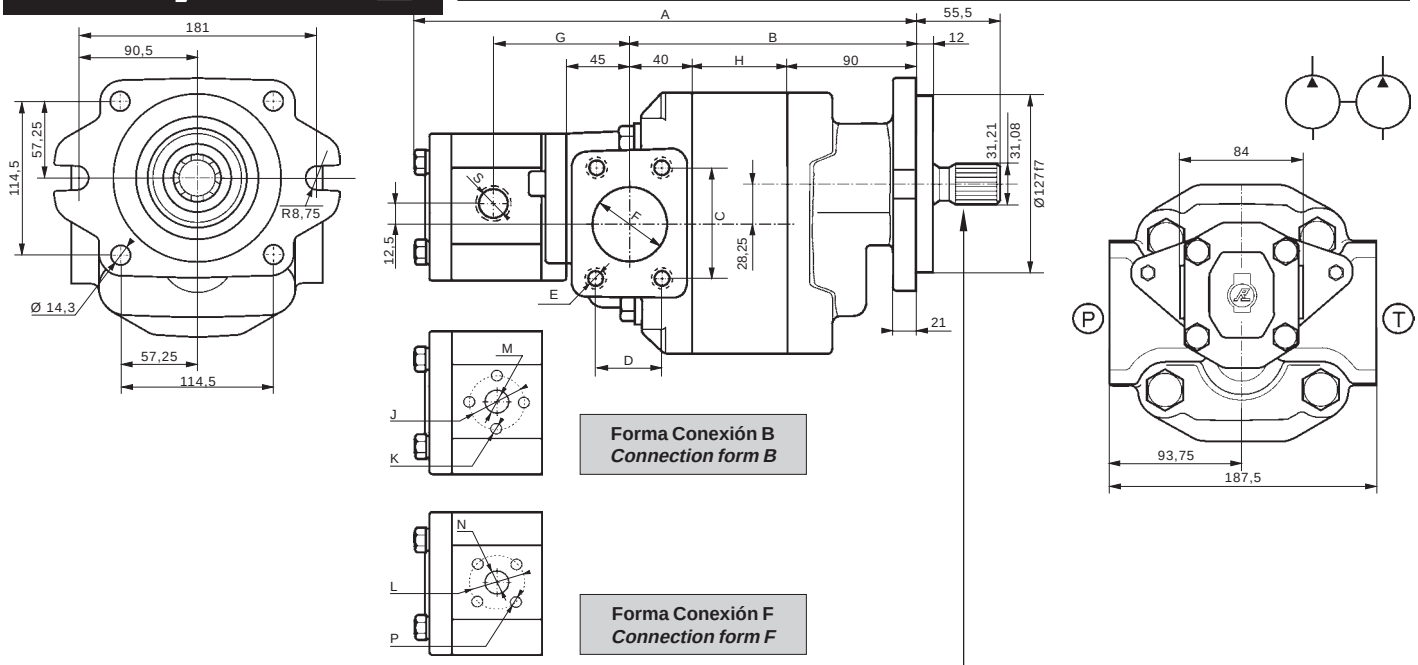


Forma Conexión B
*Connection form B*

Forma Conexión F
*Connection form F*

| Sentido de giro *Rotation sense* | Aspiración *Suction* | Presión *Pressure* |
|---|---|---|
| *D Derecha *Clockwise* | T | P |
| *I Izquierda *Counter Clockwise* | P | T |

**Eje forma / Shaft form G**

Características / *Spline data*
ANSI B92.1
Diametral pitch 12/24
Angulo de presión / *Pressure angle* 30°
Nº de dientes / *Teeth number* 14

| Referencia *Reference* | Cilindrada *Displacement* cm³/v PNC | L | A | B | G | H | Presión / *Pressure* Conexión / *Connection* M(S.A.E.) C | D | E | F | R S | B J | K | M | F L | P | N | Aspiración / *Suction* Conexión / *Connection* M(S.A.E.) C | D | E | F | R S | B J | K | M | F L | P | N |
|---|---|---|---|---|---|---|---|---|---|---|---|---|---|---|---|---|---|---|---|---|---|---|---|---|---|---|---|---|
| ▲ PNH 80 - 9 *G09MR | 53.3 | 6 | 304 | 171 | 82.5 | 41 | 58.7 | 30.2 | M.10 | Ø32 | 3/8" BSP | 30 | M.6 | 13.5 | 35 | M.6 | 15 | 69.8 | 35.7 | M.12 | Ø38 | 1/2" BSP | 30 | M6 | 13.5 | 40 | M.6 | 15 |
| 12 *G09MR | | 8 | 308 | | 84.6 | | | | | | | | | 15 | | | | | | | | | 40 | M.8 | 20 | | | 20 |
| 16 *G09MR | | 10.6 | 312 | | 88 | | | | | | | | | | | | | | | | | | | | | | | |
| 22 *G09MR | | 14.6 | 319 | | 88 | | | | | | | | | | | | | | | | | | | | | | | |
| 27 *G09MR | | 18 | 325 | | 88 | | | | | | 1/2" BSP | | | | | | | | | | | 3/4" BSP | | | | | | |
| 35 *G09MR | | 23.3 | 334 | | 95.5 | | | | | | | | | | | | | | | | | | | | | | | |
| ▲PNH 100 - 9 *G09MR | 66.6 | 6 | 311 | 177.5 | 82.5 | 47.5 | 58.7 | 30.2 | M.10 | Ø32 | 3/8" BSP | 30 | M.6 | 13.5 | 35 | M.6 | 15 | 69.8 | 35.7 | M.12 | Ø38 | 1/2" BSP | 30 | M6 | 13.5 | 40 | M.6 | 15 |
| 12 *G09MR | | 8 | 314 | | 84.6 | | | | | | | | | 15 | | | | | | | | | 40 | M.8 | 20 | | | 20 |
| 16 *G09MR | | 10.6 | 319 | | 88 | | | | | | | | | | | | | | | | | | | | | | | |
| 22 *G09MR | | 14.6 | 325 | | 88 | | | | | | | | | | | | | | | | | | | | | | | |
| 27 *G09MR | | 18 | 331 | | 88 | | | | | | 1/2" BSP | | | | | | | | | | | 3/4" BSP | | | | | | |
| 35 *G09MR | | 23.3 | 340 | | 96.5 | | | | | | | | | | | | | | | | | | | | | | | |
| ▲PNH 125 - 9 *G09MR | 83.3 | 6 | 319 | 185.5 | 82.5 | 55.5 | 58.7 | 30.2 | M.10 | Ø32 | 3/8" BSP | 30 | M.6 | 13.5 | 35 | M.6 | 15 | 69.8 | 35.7 | M.12 | Ø38 | 1/2" BSP | 30 | M6 | 13.5 | 40 | M.6 | 15 |
| 12 *G09MR | | 8 | 322 | | 84.6 | | | | | | | | | 15 | | | | | | | | | 40 | M.8 | 20 | | | 20 |
| 16 *G09MR | | 10.6 | 327 | | 88 | | | | | | | | | | | | | | | | | | | | | | | |
| 22 *G09MR | | 14.6 | 333 | | 88 | | | | | | | | | | | | | | | | | | | | | | | |
| 27 *G09MR | | 18 | 339 | | 88 | | | | | | 1/2" BSP | | | | | | | | | | | 3/4" BSP | | | | | | |
| 35 *G09MR | | 23.3 | 348 | | 96.5 | | | | | | | | | | | | | | | | | | | | | | | |
| ▲PNH 150 - 9 *G09MR | 100 | 6 | 327 | 194 | 82.5 | 64 | 69.8 | 35.7 | M.12 | Ø38 | 3/8" BSP | 30 | M.6 | 13.5 | 35 | M.6 | 15 | 77.8 | 42.9 | M.12 | Ø50 | 1/2" BSP | 30 | M6 | 13.5 | 40 | M.6 | 15 |
| 12 *G09MR | | 8 | 331 | | 84.6 | | | | | | | | | 15 | | | | | | | | | 40 | M.8 | 20 | | | 20 |
| 16 *G09MR | | 10.6 | 335 | | 88 | | | | | | | | | | | | | | | | | | | | | | | |
| 22 *G09MR | | 14.6 | 342 | | 88 | | | | | | | | | | | | | | | | | | | | | | | |
| 27 *G09MR | | 18 | 348 | | 88 | | | | | | 1/2" BSP | | | | | | | | | | | 3/4" BSP | | | | | | |
| 35 *G09MR | | 23.3 | 357 | | 96.5 | | | | | | | | | | | | | | | | | | | | | | | |
| ▲PNH 175 - 9 *G09MR | 116.6 | 6 | 335 | 202 | 82.5 | 72 | 69.8 | 35.7 | M.12 | Ø38 | 3/8" BSP | 30 | M.6 | 13.5 | 35 | M.6 | 15 | 77.8 | 42.9 | M.12 | Ø50 | 1/2" BSP | 30 | M6 | 13.5 | 40 | M.6 | 15 |
| 12 *G09MR | | 8 | 339 | | 84.6 | | | | | | | | | 15 | | | | | | | | | 40 | M.8 | 20 | | | 20 |
| 16 *G09MR | | 10.6 | 343 | | 88 | | | | | | | | | | | | | | | | | | | | | | | |
| 22 *G09MR | | 14.6 | 350 | | 88 | | | | | | | | | | | | | | | | | | | | | | | |
| 27 *G09MR | | 18 | 356 | | 88 | | | | | | 1/2" BSP | | | | | | | | | | | 3/4" BSP | | | | | | |
| 35 *G09MR | | 23.3 | 365 | | 96.5 | | | | | | | | | | | | | | | | | | | | | | | |
| ▲PNH 200 - 9 *G09MR | 133.3 | 6 | 344 | 210.5 | 82.5 | 80.5 | 69.8 | 35.7 | M.12 | Ø38 | 3/8" BSP | 30 | M.6 | 13.5 | 35 | M.6 | 15 | 77.8 | 42.9 | M.12 | Ø50 | 1/2" BSP | 30 | M6 | 13.5 | 40 | M.6 | 15 |
| 12 *G09MR | | 8 | 347 | | 84.6 | | | | | | | | | 15 | | | | | | | | | 40 | M.8 | 20 | | | 20 |
| 16 *G09MR | | 10.6 | 351 | | 88 | | | | | | | | | | | | | | | | | | | | | | | |
| 22 *G09MR | | 14.6 | 358 | | 88 | | | | | | | | | | | | | | | | | | | | | | | |
| 27 *G09MR | | 18 | 364 | | 88 | | | | | | 1/2" BSP | | | | | | | | | | | 3/4" BSP | | | | | | |
| 35 *G09MR | | 23.3 | 373 | | 96.5 | | | | | | | | | | | | | | | | | | | | | | | |
| ▲PNH 225 - 9 *G09MR | 150 | 6 | 352 | 21.5 | 82.5 | 88.5 | 69.8 | 35.7 | M.12 | Ø38 | 3/8" BSP | 30 | M.6 | 13.5 | 35 | M.6 | 15 | 77.8 | 42.9 | M.12 | Ø50 | 1/2" BSP | 30 | M6 | 13.5 | 40 | M.6 | 15 |
| 12 *G09MR | | 8 | 355 | | 84.6 | | | | | | | | | 15 | | | | | | | | | 40 | M.8 | 20 | | | 20 |
| 16 *G09MR | | 10.6 | 360 | | 88 | | | | | | | | | | | | | | | | | | | | | | | |
| 22 *G09MR | | 14.6 | 366 | | 88 | | | | | | | | | | | | | | | | | | | | | | | |
| 27 *G09MR | | 18 | 372 | | 88 | | | | | | 1/2" BSP | | | | | | | | | | | 3/4" BSP | | | | | | |
| 35 *G09MR | | 23.3 | 381 | | 96.5 | | | | | | | | | | | | | | | | | | | | | | | |



Polígono Indutrial O Rebullón s/n. 36416 - Mos - España - rodavigo@rodavigo.com

## Sección *Section* PNK

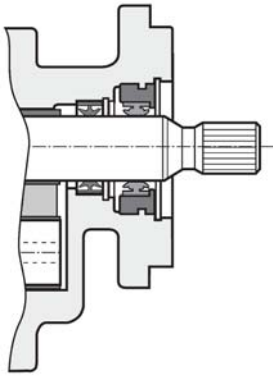

▲
14 PNK... Con dos retenes y fuga exterior.
*With two shafts seals and external drain.*

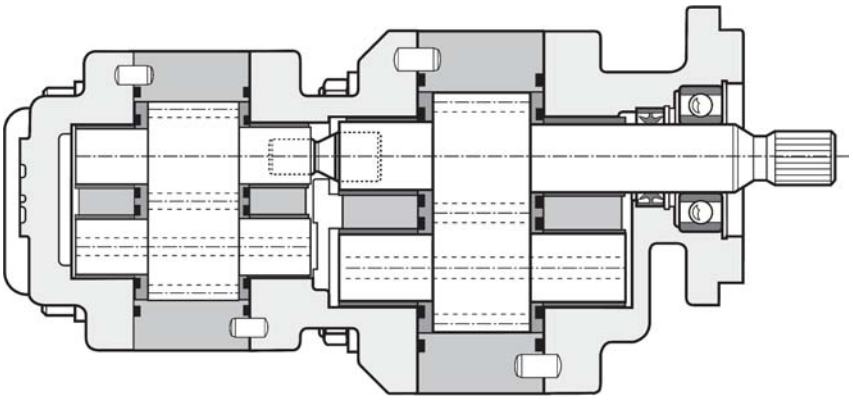

▲
13 PNK... Con cojinete de apoyo y retén.
*With ball bearing and shaft seal.*

## Sección *Section* PNH

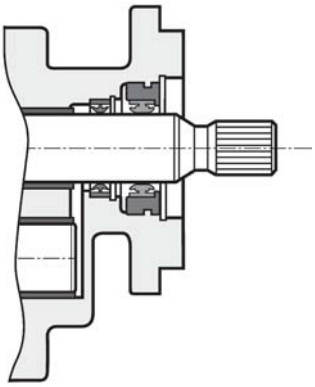

▲
14 PNH... Con dos retenes y fuga exterior.
*With two shafts seals and external drain.*

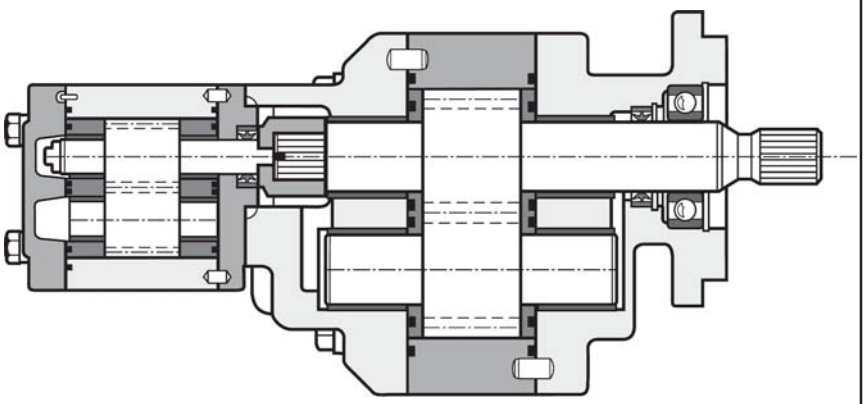

▲
13 PNH... Con cojinete de apoyo y retén.
*With ball bearing and shaft seal.*



Polígono Indutrial O Rebullón s/n. 36416 - Mos - España - rodavigo@rodavigo.com

Roquet

**NOTAS**
*NOTES*

# Pedro Roquet, s/a

www.pedro-roquet.com

Distribuidor / Agent:

02.04.01/03.01

www.ciandisseny.com